TRADEMARK HARDWARE
WORLD OF QUALITY HARDWARE

Product Specs

2-1/2" WALL BUMPER WITH HOOK AND EYE / SOLID BRASS

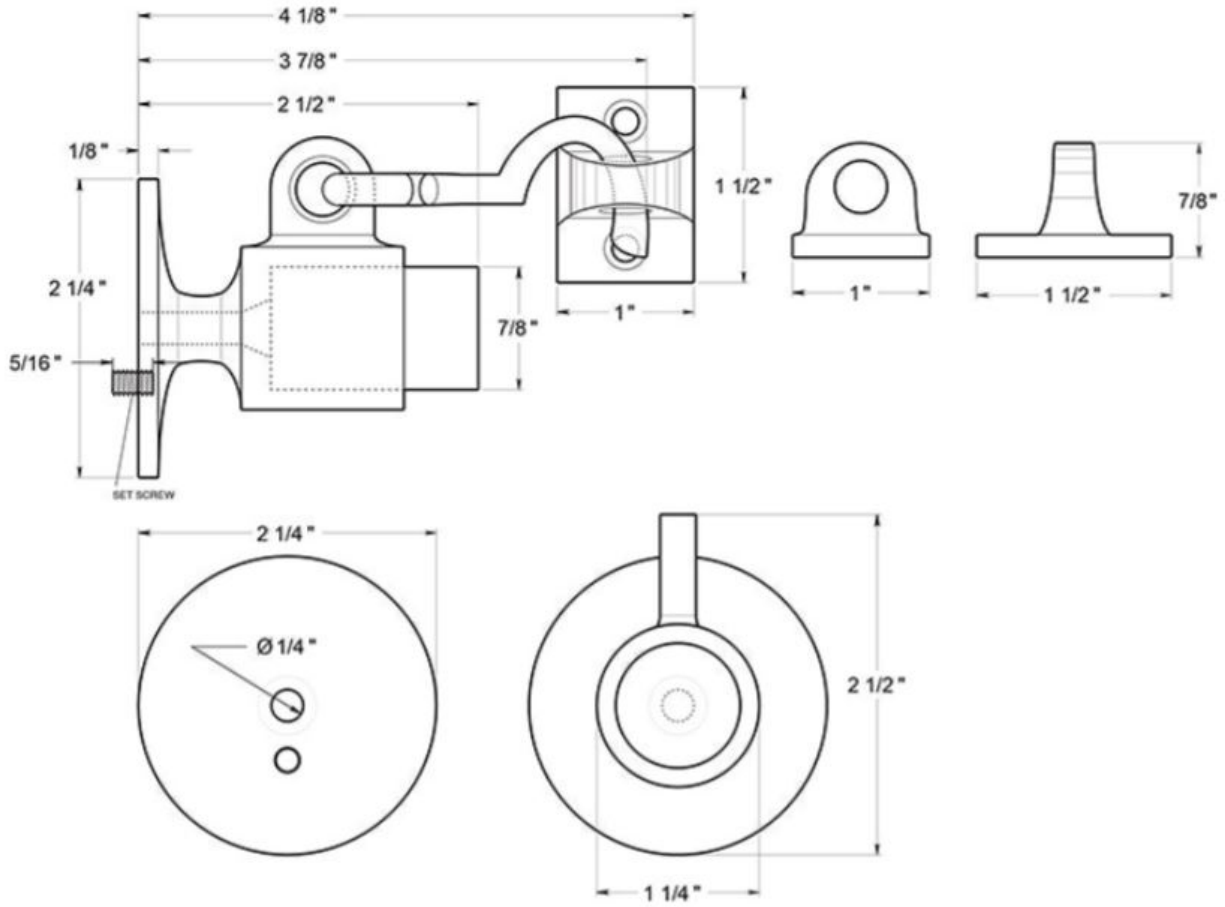

SKU: DSAHW328

www.tmhardware.com 845-388-1300 845-388-1388 sales@tmhardware.com