TRADEMARK HARDWARE
WORLD OF QUALITY HARDWARE

Product Specs

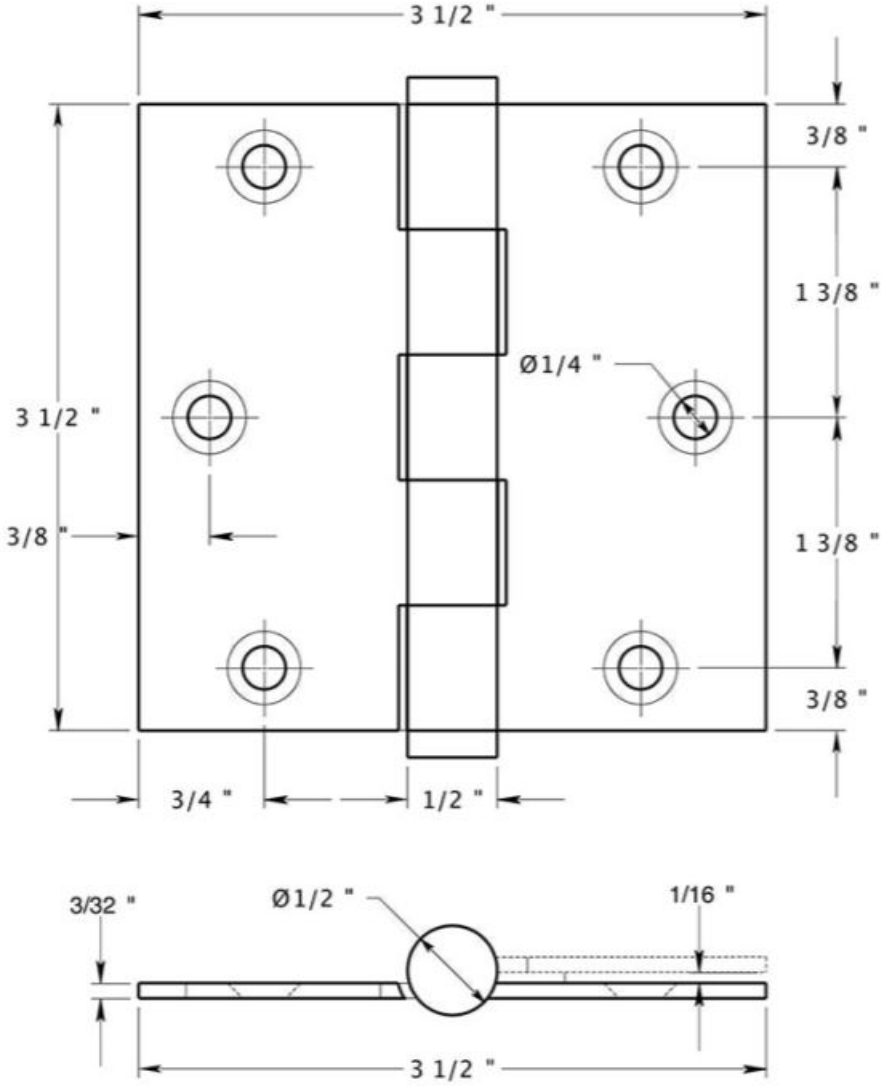

SKU: DDSB35-R

www.tmhardware.com
845-388-1300
845-388-1388
sales@tmhardware.com