TRADEMARK HARDWARE
WORLD OF QUALITY HARDWARE

Product Specs

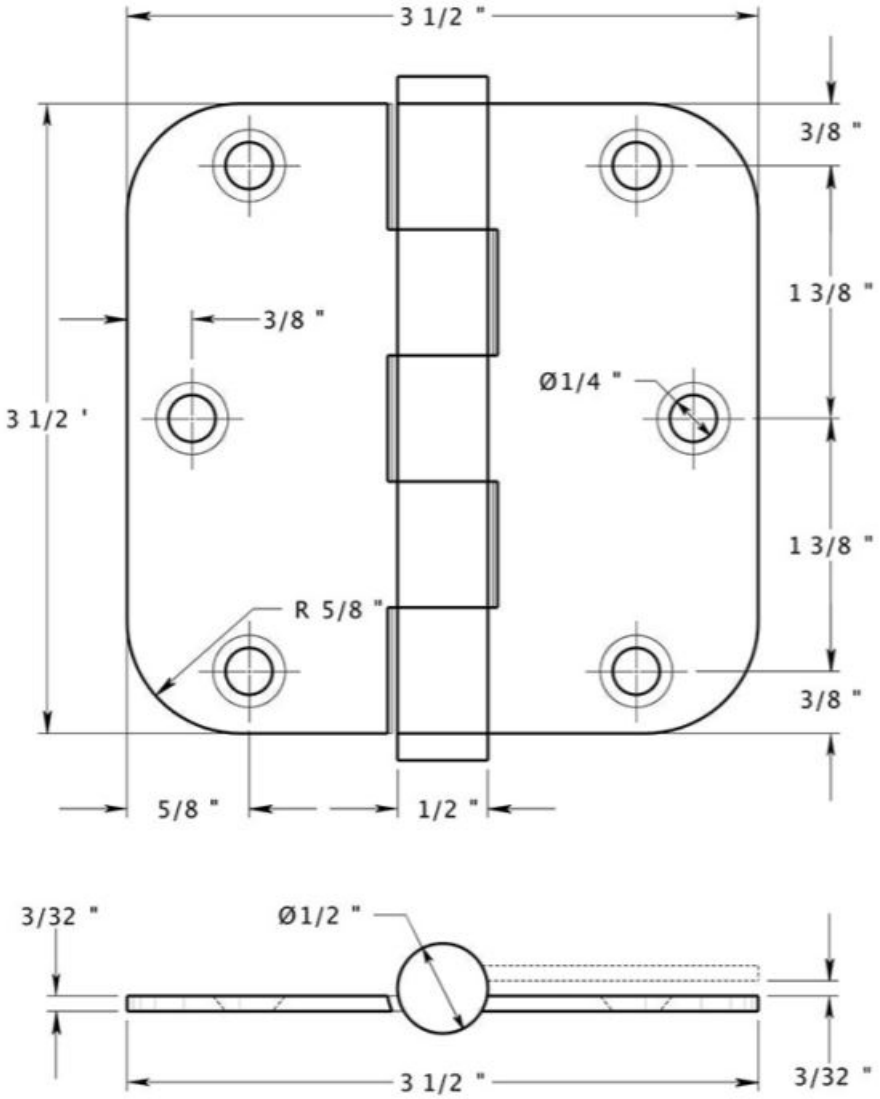

SKU: DSB35R5-R